HYDROGEN FUELLED INTERNAL COMBUSTION ENGINES

Roger Sierens
Sebastian Verhelst
Laboratory of Transport Technology
Ghent University
Sint Pietersnieuwstraat 41
B-9000 Gent
Belgium
Tel +0032/(0)92643307 Fax +0032/(0)92643590
E-mail: roger.sierens@UGent.be, Sebastian.verhelst@UGent.be

ABSTRACT

Hydrogen is seen as one of the important energy vectors of the next century. Hydrogen as a renewable energy source, provides the potential for a sustainable development particularly in the transportation sector. Hydrogen driven vehicles reduce both local as well as global emissions.

The laboratory of transport technology (Ghent University) converted a GM/Crusader V-8 engine for hydrogen use. Once the engine is optimized, it will be built in a low-floor midsize hydrogen city bus for public demonstration.

For a complete control of the combustion process and to increase the resistance to backfire (explosion of the air-fuel mixture in the inlet manifold), a sequential timed multipoint injection of hydrogen and an electronic management system is chosen. The results as a function of the engine parameters (ignition timing, injection timing and duration, injection pressure) are given.

Special focus is given to topics related to the use of hydrogen as a fuel: ignition characteristics (importance of electrode distance), quality of the lubricating oil (crankcase gases with high contents of hydrogen), oxygen sensors (very lean operating conditions), noise reduction (configuration and length of inlet pipes). The advantages and disadvantages of a power regulation only by the air to fuel ratio (as for diesel engines) against a throttle regulation (normal gasoline or gas regulation) are examined.

Finally the goals of the development of the engine are reached: power output of 90 kW, torque of 300 Nm, extremely low emission levels and backfire-safe operation.

Keywords: alternative fuel, hydrogen, engine development, engines testing.

INTRODUCTION

Hydrogen fuelled engines are known for many advantages, among which the very low concentration of pollutants in the exhaust gases compared to internal combustion engines using traditional or other alternative fuels. Further on, because of the wide flammability limits and the high flame propagation speed of hydrogen, a hydrogen fuelled engine is capable of very lean combustion.

To be able to run a hydrogen engine, the mixture formation of air and hydrogen does not need precise control (Das, 1990). Consequently, simple systems such as an external mixture system with a gas carburettor (venturi type) can be used for the fuel supply. Such a system is first implemented on the tested engine. However, a complete control of the combustion process is only possible with an injection system and an electronic control unit (electronic management system), as used for all new gasoline and diesel engines. Therefore, the carburettor is discarded to be replaced by a low-pressure gas injection system in the inlet manifold, allowing multi-point sequential injection of the gaseous hydrogen fuel in each inlet channel just before the inlet valve.

Such an injection system, as applied to liquid fuels (gasoline, liquid LPG, …) has several advantages including the possibility to tune the air-fuel ratio of each cylinder to a well-defined value, increased power output and decreased cyclic variation of the combustion process in the cylinders. Timed injection also has an additional benefit for a hydrogen fuelled engine, as it implies a better resistance to backfire. All these advantages are well known (Sorusbay and Veziroglu, 1988)(Kondo et al., 1996)(Lee et al., 1995)(Guo et al., 1999).

The disadvantage of low pressure sequential gas injection is the low density of the gas. For smaller engines running at high speeds (traction application), the injectors have to deliver a high

volume of gas in a very short time. Other problems may arise with the durability of the injectors and possible leaks.

In the period 1993-95, different types of electromagnetic gas injectors were tested in detail (Sierens and Rosseel, 1995a, 1995b). Leakage, unequal response time (opening delay) and low durability were the main shortcomings. In the mean time, the research on gaseous injection systems (natural gas, LPG, …) has been increased enormously by the specialised companies.

As mentioned above, sequential timed injection increases the resistance to backfire (explosion of the air-fuel mixture in the inlet manifold). In nearly all cases, backfire-safe operation implies a limitation of the operation region of the air-fuel mixture on the "rich" side, thus for high load conditions. This restriction is decreased by the use of a multi-point sequential injection system. Direct injection in the combustion chamber, cryogenic storage (LH_2 tank) and pump is even better, but not technically available for mass production (Furuhama, 1995).

DESCRIPTION OF THE TEST RIG

Engine

A GM 454 spark ignited engine (commonly known as the Chevrolet 'Big Block') is adapted to gaseous fuels.
The engine specifications are:

- 8 cylinders in V
- bore : 107.95 mm
- stroke : 101.60 mm
- swept volume : 7.4 l (454 in³)
- compression ratio : 8.5:1
- engine speed : 750 – 4000 rpm
- ignition sequence : 18436572
- EVO 93° c.a. before BDC
- EVC 62° c.a. after TDC
- IVO 42° c.a. before TDC
- IVC 95° c.a. after BDC

The engine is connected to a water (Froude) brake.

The fuel supply system

As mentioned, the engine is first equipped with a gas carburettor. This gas carburettor together with some additional equipment allows experimenting with different fuels: pure hydrogen, natural gas and hythane (a mixture of hydrogen and natural gas) (Sierens and Rosseel, 1998a).
A multi-point sequential injection system is then implemented to take advantage of its controlling possibilities. The fuel is supplied from steel bottles with compressed hydrogen at 200 bar. After a pressure reducing valve that expands the hydrogen to a pressure of about 3 bar, the hydrogen is admitted to a common rail system. From the common rail, 8 tubes deliver the hydrogen to the 8 individual injectors.
The injectors are originally developed for use with natural gas. In idling conditions, problems arose with deviations in injection duration between the individual injectors. This is due to the small reproducability of the injection durations applied during idle run (of the order of 3ms). New injectors are mounted with a shorter length of stroke, to ensure good reproducability with these short injection durations. Secondly, the injector needle cone angle is made more obtuse, to allow a greater fuel flow for a smaller levy of the injector needle.
Each cylinder has a short inlet pipe (no common inlet manifold), and the injector is located at 12 cm from the cylinder head under an angle of 45°. This location and angle is studied with a CFD code to optimize the mixing of the hydrogen with air. Fig. 1 gives a view of the installation of the injectors.

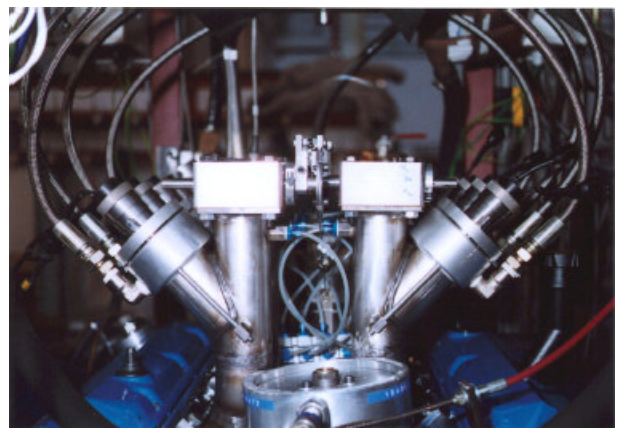

Fig. 1. View of the injection system

Apparatus

The engine is fully equiped with the usual sensors. The measurement/control signals are read and controlled by a PLC system (Programmable Logic Controller). This system monitors engine speed, oil and coolant temperature, exhaust gas temperatures, etc. and shuts down the engine when necessary (by cutting off the hydrogen supply). All values are visible on a computer screen and can be stored in a Microsoft Excel worksheet.
The exhaust temperature and exhaust gas composition can be measured at the exhaust of each cylinder and at the end of each bank (V engine). Two oxygen sensors are installed at the common exhaust pipe of each bank, which allows an immediate reading of the air to fuel ratio of each bank. The oxygen sensors together with the exhaust temperatures give the possibility to check differences in mixture-richness between the cylinders.

The exhaust gas components are measured with the following methods of measurement: CO-CO_2-NO-NO_2 (Multor 610, non dispersive infra red); O_2 (Servomex model OA 1100, paramagnetic); HC (Signal model 3000, flame ionization); H_2 (Thermor 615, thermal conduction).
A high pressure transducer (type AVL QC32) is located in one cylinder head (mounted flush with the combustion chamber wall of cylinder 1) giving in-cylinder pressure measurements, used for the calculation of e.g. heat release analysis.

EXPERIMENTAL PROGRAMME

An extensive test program is set up in different steps:
Step 1. Adaption of the engine for hydrogen fuel with a carburetted fuel preparation system,
Step 2. For this carburetted version examination of variable compositions of hydrogen-natural gas mixtures (hythane) to obtain an increased engine efficiency and decreased emissions,
Step 3. The installation of a hydrogen timed injection system. Tests have to point out if the injection system is reliable, produces sufficient power and torque for traction applications, without backfire occurrence,
Step 4. Optimisation of the inlet manifold, the injection characteristics (pressure, timing) and the management system for the whole speed-load range of the engine.

The tests with the gas carburettor (venturi type mixing) are completely finished (step 1). This fuel supply system with mass flow meter, mass flow controller and control unit, provided natural gas/hydrogen mixtures in variable proportion, regulated independently of the engine operating conditions. The results on the effects of the use of hythane, step 2, were presented by Sierens and Rosseel (1998a).

The first results with the multi-point sequential injection system, step 3, are already given by Sierens (1999). This paper now gives part of the optimisation of the engine parameters, step 4, and some problems arising from the use of hydrogen as a fuel in internal combustion engines. Further optimisation is in progress.

OPTIMISATION OF THE ENGINE PARAMETERS

One of the main problems to run a hydrogen fuelled engine is backfire. To avoid backfire, the engine is run with a lean mixture. Several tests have shown that with an air to fuel ratio λ of 2, backfire safe operation is obtained (Sierens and Rosseel, 1998b). But with such lean mixtures, the power output of the engine decreases (Sorusbay and Veziroglu, 1988). As the engine has to be built in a city bus, a power output of 90 kW and a torque of 300 Nm are the minimum conditions.

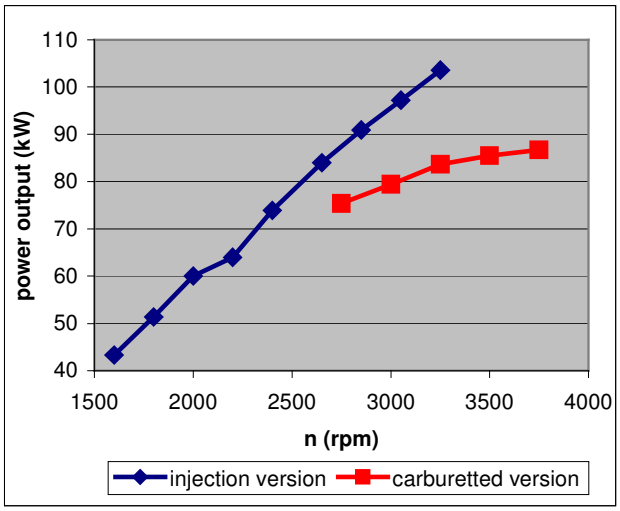

Fig. 2. Power output

The main objective of the optimisation, step 4, is thus to obtain maximum engine torque and power over the whole of the speed range (750-4000 rpm). This optimisation is done with a fixed air

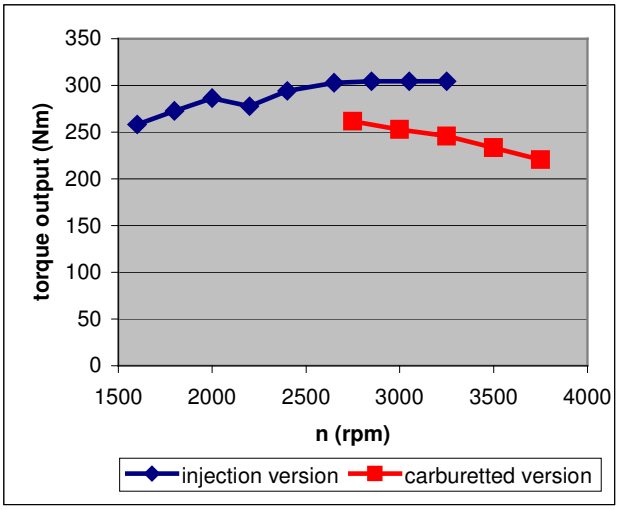

to fuel ratio λ of 2. The Figures 2 and 3 show the power output (kW) and torque (Nm) for the speed range with λ=2 and the ignition timing (IT) set to 20° c.a. BTDC.

Fig. 3. Torque output

These are the initial and starting settings of the engine, which were the results of the third step in the experimental programme. For comparison, these figures also show the results with the carburetted fuel mixing system (results of first step). The increase of the power output and torque for the injection version is mainly due to the better filling of the engine. These

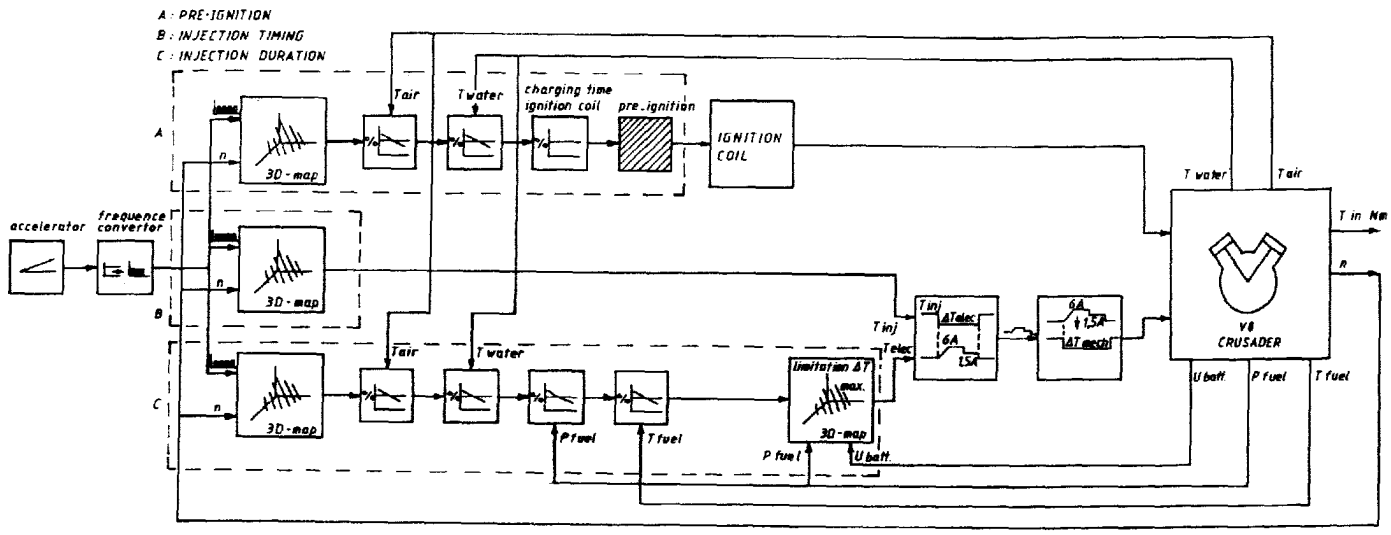

Fig. 4. Control scheme of the motor management system

tests are done with wide open throttle (WOT). For part load conditions the mixture is set leaner and leaner (λ=5 is possible), as is done for diesel regulations, except for idling conditions.

Another possible optimisation strategy is towards minimum exhaust gas pollution (second part of step 4). Although a hydrogen engine naturally is a very low emission engine, problems arose with the amount of unburned hydrogen in the exhaust gases during idle run, as will be discussed later. The possible optimisation of this emission is currently being researched.
The main engine parameters suitable for optimisation are the ignition timing, the injection pressure, the injection timing and the injection duration.
The control scheme of the motormanagement system is given in Fig. 4. The various parts are examined in the following paragraphs.

Ignition timing

The ignition advance is normally set to the minimum value for best torque (MBT timing). This is the compromise between a high power output (necessary due to the losses in volumetric efficiency) and a minimum ignition advance to decrease NO_x values. For the basic parameter setting (n=3500 rpm, full load), as an example, the influence of the ignition timing on the torque output is given in Fig. 5.

For lean mixtures (low loads and speeds), the optimum ignition timing is early, up to 50° ca BTDC (power cycle). The engine load is the main influence. For high loads and speeds (maximum power output) the optimum ignition timing is about 20° BTDC. This is shown in Fig. 6, with the ignition timing (in °ca BTDC) along the Z axis, as a function of engine load (Y site, with the engine load proportional to the reading of a simulated MAP sensor- where 0 mbar represents idle conditions and 2000 mbar represents full power) and as a function of engine speed (X site).

The efficiency of a hydrogen fuelled engine is very dependent on an optimally adjusted ignition timing as a function of the richness of the mixture (i.e. the load, as mentioned above).

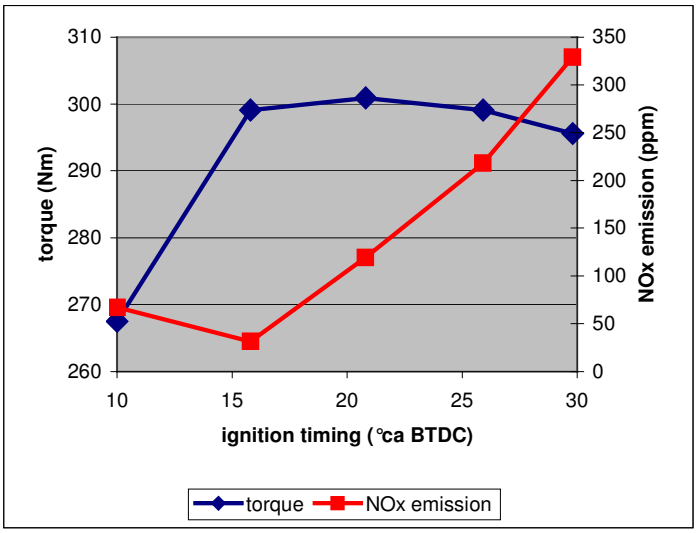

Fig. 5. Torque and NO_x emission versus IT

Figure 6 clearly shows that the influence of the load is much more important than the engine speed.

Even with this MBT timing the exhaust gases are very clean. The only noxious exhaust emission to consider for a hydrogen engine is NO_x. As an example, the influence of the ignition timing on the NO_x emissions for the conditions of Fig. 5 (λ=2, n=3500 rpm) is a minimum measured NO_x emission of 32 ppm for an ignition timing of 15.8° BTDC and a maximum of 329 ppm for the ignition timing of 29.8° BTDC. The maximum NO_x emission over the whole speed-load region was found to be about 750 ppm, occurring at a low speed, high load setting (1000 rpm, with a torque of 256 Nm).

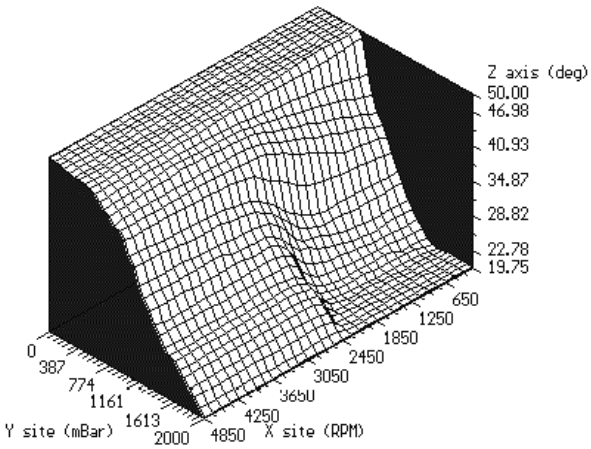

Fig. 6. Ignition map

Injection pressure

When the injection pressure is raised, the power output will rise due to the higher amount of hydrogen in the engine (if injection durations are fixed). However, the possibilities of variations in injection pressure are limited according to the chosen means of storage of the hydrogen. When the hydrogen is stored in liquid form, the pressure in the cryogenic tanks is restricted. For this reason, a constant injection pressure of 3 bar was respected. In case of gaseous storage in pressurized form, it would be possible to vary the injection pressure according to the desired power output (but keeping the limitations of the air to fuel ratio λ=2).

Injection duration

The engine is operated as a diesel engine: it is a spark-ignited engine but load variations are captured through variations in the richness of the hydrogen-air mixture. As a consequence, the injection duration (in degrees crank angle) is proportional to the engine load. Thus, in idling conditions, injection durations of about 3 ms are applied, corresponding to 13.5 degrees c.a. with an engine speed of 750 rpm. Under high load conditions, injection durations of up to 14 ms and more are applied, corresponding to 315 degrees c.a. with an engine speed of 3750 rpm. For comparison: the inlet valve opening time is 317 degrees c.a. . A more stable idle run is reached by programming a longer injection duration when the engine speed drops below the idle speed (which allows the engine to speed up to the idle speed again).

Injection timing

This parameter has a great impact in the lower range of engine loads and speeds. In this region, differences in power output, by varying the injection timing, of up to 20% are no exception. All optimum injections start at or before TDC (gas exchange), and should be advanced with speed increase. For example, during idling conditions (low speed) the injection starts at TDC and in high speed conditions the injection timing is advanced up to 105° c.a. BTDC (thus before the inlet valve opens, because of the time needed for the fuel to travel from the injector to the inlet valve, as a consequence the injection ends well before the inlet valve closes). In the higher range of engine loads and speeds, the differences in power output are still noticeable, but minimal. All injections should end before the inlet valve closes (95° c.a. after BDC).
3D plots as Fig. 6 are available for the injection duration and timing (Verhelst and Fryns, 1999).

Trims

The control system (motor management) allows corrections on the values for ignition timing and injection timing and duration as fixed in the 3D maps when the environment conditions change. Thus, changes in fuel pressure and temperature, combustion air temperature and cooling water temperature can be automatically compensated for. The calculation of the changes in density of the hydrogen fuel as a function of the fuel's temperature and pressure is taken into account in order to apply the correct injection duration. A correction of the injection duration as a function of the combustion air inlet temperature is also done.
The corrected values can differ from the programmed values by a maximum of +/- 50 %.
Other possibilities include changes in the ignition timing when the combustion air inlet temperature or cooling water temperature changes. The motormanagement also allows the regulation of a stoichiometric mixture, but it is clear that this is not an option for a hydrogen fuelled engine.
The positions in the control scheme where the trims are applied can easily be seen in Fig. 4.

HYDROGEN ENGINE-SPECIFIC PROPERTIES

Ignition characteristics

Hydrogen under high pressure is commonly used as an insulator (e.g. in the alternator of a power plant). This results in a high ignition voltage of the hydrogen-air mixture. This is solved by choosing the spark plug gap smaller than usual in classic gasoline engines (Payvey, 1988). This is possible because of the smaller amount of deposits on the electrodes (only from impurities and lubricating oil). Measurements are done to define the optimal spark gap to cover the full load and speed range: testing during idle run is necessary to ensure a stable idle run, testing during full load has to be done to make sure the arc is not blown out. The tests consist of pressure measurements in cylinder nr. 1 for different spark plug gaps. 30 cycles are measured in each working point, with 1 sample per degree crank angle. The mean pressure curve is determined, and the mean square deviations with regard to this mean pressure curve of the measured points are calculated. The mean value of these deviations is the criterium that is used to judge the stability of the combustion: the lower this value, the more stable the combustion. The spark plug gap corresponding to the most stable combustion is considered optimal.
An optimum of 0.4 mm is found, this in comparison with the spark gap of 0.9 mm before optimisation.

This previous setting of 0.9 mm is responsible for problems due to spark discharges through the air outside the cylinders. The voltage peaks on the secondary side (> 40 kV) exceed the insulation possibilities of the spark plug cables, causing spark discharges between the spark plug heads and the cylinder head. These problems are completely solved with the optimised spark gap.

Lubricating oil

During measurements of the composition of the gases in the crankcase, a very high percentage of hydrogen is noticed (+ 5 vol %, out of range of testing equipment). The very low density of hydrogen is responsible for this, causing high blow down volumes. The composition of the lubricating oil (semisynthetic) is investigated and compared to that of the unused oil.

It appears that the properties of the oil have strongly changed with a serious decrease of the lubricating qualities. The concentration of various additives (both lubricating and wear-resisting, e.g. zincdialkyldithiophosphate) is greatly decreased, esters appearing in the unused oil have almost completely disappeared in the used oil. These conclusions are drawn from the difference in absorption of the various elements in an infrared spectrum. This is understandable when one knows that hydrogen is used in the industry to harden oils to fats (breaking open the double C-C bonds).

The viscosity of the oil in atmospheric conditions has increased (causing more friction during starting) and decreased more quickly when the temperature rose (causing poor lubrication when the engine is at operating temperature). The kinematic viscosity at 40°C of the used oil is 141.9 mm²/s, as compared to the value for the unused oil of 111.8 mm²/s. At 100°C these values are respectively 14.33 mm²/s versus 17.25 mm²/s. The viscosity index of the used oil thus amounts to 99, substantially lower than that of the unused oil which is 163.
An X-ray fluorescence spectrometry shows no substantial engine part wear, which is normal considering the limited amount of testing time of the engine. This means that all changes of the oil characteristics are to be ascribed to the influence of the blow down gases.
Solutions to this problem are currently sought after. One possible solution is the combination of forced ventilation of the crank case, followed by an oil separator and a catalyst to convert the hydrogen to water, after which the gases can be carried off towards the atmosphere or to the intake manifold, depending on the composition of the gases after the catalyst. Copper catalysts are known to convert hydrogen to water, but research has to be done into a practical solution permitting the implementation to be built in. Another possibility is the application of special motor oils for usage in hydrogen engines. However, at the moment these oils are not available on the market (as far as the authors know).

Oxygen sensors

Air-fuel ratios of $\lambda = 5$ and higher are no exception on this engine. However, the manufacturers of oxygen sensors consider an air to fuel ratio of $\lambda = 1.7$ already an extremely lean mixture. Consequently, attention must be paid to an accurate calibration of the sensors along the entire range of used richness'. Correct calibration is necessary to ensure a correct reading of the air to fuel ratio, important for correct measurements as well as to be able to imply safety measures: as mentioned above, backfire-safe operation is only guaranteed if the air to fuel ratio is greater or equal than 2. A lesser accuracy with lean mixtures must also be taken into account. The relation between the voltage given off by the sensor and the concentration of oxygen in the measured gases, as provided by the manufacturer, must certainly be substituted by an adjusted calibration curve (e.g. a third degree polynomial). This is because of the strong influence of a hydrogen-air mixture (as occurring with lean mixtures) on the voltage given off by the sensor.

Noise reduction

Because of the very high noise levels of the original engine setup (up to 110 dB), tests are done with various materials and lengths of the inlet pipes (Van Boxlaer and Poot, 1998). With metal pipes based on exhaust pipes (concentric pipes, inner pipe

perforated and damping material between the pipes) with a total intake length of 0.9 m, a noise reduction of 10 dB is reached. This means that the noise level is halved. A second benefit of this configuration is a higher torque in the working region for city-bus application (around 2000 rpm).
However, this configuration can not be built in a bus because of the space needed and because of the rigid construction, sensitive to fatigue cracking due to engine vibrations.

Throttle valve or diesel principle?

The broad flammability limits of hydrogen in air (lower limit 4%, upper limit 75%), allow to capture load variations through variations in the richness of the hydrogen-air mixture, thus omitting a throttle valve. The greatest benefit is of course a better engine efficiency (no flow losses around the throttle valve).
A disadvantage is noticed when measuring the exhaust gas composition during idle run, where a high concentration of unburned hydrogen is recorded (up to 3 vol %). The extremely lean mixtures used here are responsible for this. The high percentage of hydrogen poses a problem in connection with safety issues.
In looking for methods to solve this, throttle valves (every cylinder has its own intake) are mounted. These allow to reduce the hydrogen percentage to about 1 vol %. A greater reduction is probably possible with an intake manifold with one central throttle valve, because of the more accurate regulation possible with one big valve (mechanical problems aligning eight separate valves). Thus, a compromise could be to use a throttle valve during idle run and to use wide open throttle (WOT) in all other cases, with variation of the mixture's richness. As discussed above, the effect of the engine parameters on this emission is currently being researched.

CONCLUSIONS

- A V-8 spark ignited engine is adapted for gaseous fuels. The first tests are done with an external mixture formation system (venturi type) for natural gas, hydrogen and hythane.
- With a sequential timed multipoint injection of hydrogen and the corresponding electronic management system, the power output of the engine is increased without danger of backfire.
- The optimisation of the engine parameters is discussed.
- Specific features of the use of hydrogen in IC engines is analysed:
  - The necessity of smaller spark plug gaps,
  - The deterioration of the lubricating oil,
  - Additional calibration of the oxygen sensors for the extremely lean mixtures,
  - The advantage of lean mixtures to operate at low load conditions without a throttle valve. But with the disadvantage of increased hydrogen concentration in the exhaust gases at idling.

ACKNOWLEDGEMENTS

The work described in this paper is partly sponsored by the Commission of the European Union in the framework of the CRAFT action (contract BRST-CT98-5349). Other parties involved in this contract are Hydrogen Systems n.v. (BE), Vialle b.v. (NL), Trivia Technologies Int. (LU), Betronic b.v. (NL), Berkhof b.v. (NL), and CES-Continental Energy Systems (BE).

REFERENCES

DAS L.M., 1990, Fuel induction techniques for a hydrogen operated engine. International Journal of Hydrogen Energy, Vol.15, 1990, pp. 823-42.

FURUHAMA S., 1995, Problems of forecasting the future of advanced engines and engine characteristics of the hydrogen injection with LH_2 tank and pump. 1995 Calvin Rice lecture, ASME, 23/4/95.

GUO L.S., LU H.B., LI J.D., 1999, A hydrogen injection system with solenoid valves for a four-cylinder hydrogen-fuelled engine. International Journal of Hydrogen Energy, Vol. 24, 1999, pp. 377-382.

KONDO T., HIRUMA M., FURUHAMA S., 1996, A study on the mechanism of backfire in external mixture formation hydrogen engines. Proceedings of the 11th World Hydrogen Energy Conference, Stuttgart, 23-28 June 1996, Vol. 2, pp. 1547-1556.

LEE S.T., YI H.S., KIM E.S., 1995, Combustion characteristics of intake port injection type hydrogen fuelled engine. International Journal of Hydrogen Energy, Vol. 20, 1995, pp. 317-322.

PAYVEY M., 1988, Fuel from water. Louisville, Merit Products.

SIERENS R., ROSSEEL E., 1995a, Development of a multi-point timed injection S.I. natural gas engine. ASME 1995 Spring Engine Technology Conference, Marietta (Ohio). ICE, Vol. 24, Natural Gas and Alternative Fuels for engines, p. 99-104.

SIERENS R., ROSSEEL E., 1995b, Sequential injection of gaseous fuels. 5th Int. EAEC Congress, Strasbourg, June 1995, paper n° SIA 9506A03, 10p.

SIERENS R., ROSSEEL E., 1998a, Variable composition hydrogen/natural gas mixtures for increased engine efficiency and decreased emissions. ASME 1998 Spring Engine Technology Conference, Fort Lauderdale, 26-29/4/98, paper n° 98-ICE-105.

SIERENS R., ROSSEEL E., 1998b, Backfire mechanism in a carburetted hydrogen fuelled engine. Proceedings of the 12th World Hydrogen Energy Conference, Buenos Aires, 21-25 June 1998, Vol.2, pp 1537-1546.

SIERENS R., 1999, The development of a hydrogen fuelled V-8 engine. 7th Int. EAEC Congres, Barcelona, June 1999, paper n° STA99C435.

SORUSBAY C., VEZIROGLU T. N., 1988, Mixture formation techniques for hydrogen-fuelled internal combustion engines. Proceedings of the 7th World Hydrogen Energy Conference, Moscow, 1988, Vol.3, pp. 1909-1921.

VAN BOXLAER L., POOT T., 1998, Optimalisatie van een inlaatsysteem voor een waterstofmotor (The optimisation of the intake manifold of a hydrogen fuelled engine). End of year thesis, Laboratory of Transporttechnology, Ghent University, Belgium.

VERHELST S., FRYNS J., 1999, Inbouw van en onderzoek rond een waterstofmotor (The building-in and research of a hydrogen fuelled engine). End of year thesis, Laboratory of Transporttechnology, Ghent University, Belgium.